BLACK BOX
NETWORK SERVICES

© Copyright 2006. Black Box Corporation. All rights reserved

1000 Park Drive * Lawrence, PA. 15055-1018 * 724-746-5500 * Fax 724-746-0746

Document Number 55-80128BB-00 A5 December 2006

BLACK BOX
NETWORK SERVICES

December 2006

LHC001A-R4 - LHC002A-R4
LHC005A-R4 - LHC006A-R4
LHC007A-MT-R3 - LHC008A-R3
LHC009A-R3 - LHC5129A-R3
LHC5130A-R3 - LHC5132A-R3
LHC5133A-R3 - LHC5134A
LHC5135A - LHC037A
LHC038A - LHC039A
LMC7030A - LMC7031A

100 Mbps
Compact Media Converter

CUSTOMER SUPPORT INFORMATION

Order **toll-free** in the U.S.: **877-877-BBOX** (outside U.S. call **724-746-5500**)
FREE technical support, 24 hours a day, 7 days a week: Call **724-746-5500** or fax **724-746-0746**
Mail order: **Black Box Corporation**, 1000 Park Drive, Lawrence, PA 15055-1018
Web site: **www.blackbox.com** • E-mail: **info@blackbox.com**

Notes:

Notes:

European Directive 2002/96/EC (WEEE) requires that any equipment that bears this symbol on product or packaging must not be disposed of with unsorted municipal waste. This symbol indicates that the equipment should be disposed of separately from regular household waste. It is the consumer's responsibility to dispose of this and all equipment so marked through designated collection facilities appointed by government or local authorities. Following these steps through proper disposal and recycling will help prevent potential negative consequences to the environment and human health. For more detailed information about proper disposal, please contact local authorities, waste disposal services, or the point of purchase for this equipment.

blackbox.com

Table of Contents

About the 100 Mbps Compact Media Converter 1
LED Indicators 2
Installing the 100 Mbps Compact Media Converter 3
Configuring the 100 Mbps Compact Media Converter 4
About FiberAlert and LinkLoss 5
Specifications 7
Black Box Customer Service 8
Fiber Optic Cleaning Guidelines 8
Electrostatic Discharge Precautions 9
Warranty 9
Federal Communications Commission
Radio Frequency Interference Statement 10

About the 100 Mbps Compact Media Converter

The Compact Media Converter converts between 100 Mbps twisted pair and 100 Mbps multi-mode or single-mode fiber. It is available with one RJ-45 connector for the twisted pair port and several types of fiber connectors, including ST, SC and MT, for the fiber port. Single-strand fiber versions are also available. This 1U high, standalone unit includes diagnostic LEDs for each port and a universal (100/240 VAC) power supply.

LHC001A-R4	TX/FX-MM1300-ST, 2 km
LHC002A-R4	TX/FX-MM1300-SC, 2 km
LHC005A-R4	TX/FX-SM1310/PLUS-ST, 40 km
LHC006A-R4	TX/FX-SM1310/PLUS-SC, 40 km
LHC007A-MT-R3	TX/FX-MM1300-MT, 2 km
LHC008A-R3	TX/SX-MM850-ST, 300 m
LHC009A-R3	TX/SX-MM850-SC, 300 m
LHC037A	TX/FX-SM1310/LONG-ST, 80 km
LHC038A	TX/FX-SM1310/LONG-SC, 80 km
LHC039A	TX/FX-SM1550/LONG-SC, 100 km

Single Strand Products:

LMC7030A	TX/SSFX-MM1310-SC (1310xmt/1550rcv), 2 km
LMC7031A	TX/SSFX-MM1550-SC (1550xmt/1310rcv), 2 km
LHC5129A-R3	TX/SSFX-SM1310-SC (1310xmt/1550rcv), 20 km
LHC5130A-R3	TX/SSFX-SM1550-SC (1550xmt/1310rcv), 20 km
LHC5132A-R3	TX/SSFX-SM1310/PLUS-SC (1310xmt/1550rcv), 40 km
LHC5133A-R3	TX/SSFX-SM1550/PLUS-SC (1550xmt/1310rcv), 40 km
LHC5134A	TX/SSFX-SM1310/LONG-SC (1310xmt/1550rcv), 60 km
LHC5135A	TX/SSFX-SM1550/LONG-SC (1550xmt/1310rcv), 60 km

Federal Communication Commission Radio Frequency Interference Statement

This equipment has been tested and found to comply with the limits for a Class B computing device, pursuant to Part 15 of the FCC Rules. These limits are designed to provide reasonable protection against harmful interference when the equipment is operated in a commercial environment. This equipment generates, uses and can radiate radio frequency energy and, if not installed and used in accordance with the instruction manual, may cause harmful interference to radio communications. Operation of this equipment in a residential area is likely to cause harmful interference in which the user will be required to correct the interference at his own expense.

Any changes or modifications not expressly approved by the manufacturer could void the user's authority to operate the equipment.

The use of non-shielded I/O cables may not guarantee compliance with FCC RFI limits. This digital apparatus does not exceed the Class B limits for radio noise emission from digital apparatus set out in the Radio Interference Regulation of the Canadian Department of Communications.

Le présent appareil numérique n'émet pas de bruits radioélectriques dépassant les limites applicables aux appareils numériques de classe B prescrites dans le Règlement sur le brouillage radioélectrique publié par le ministère des Communications du Canada.

Electrostatic Discharge Precautions

Electrostatic discharge (ESD) can damage to add-in modules. Always observe the following precautions when installing or handling an add-in module or any board assembly.

1) Do not remove unit from its protective packaging until ready to install it.
2) Wear an ESD wrist grounding strap before handling any module or component. If without a wrist strap, maintain grounded contact with the system unit throughout any procedure requiring ESD protection.
3) Hold boards by the edges only; do not touch the electronic components or gold connectors.
4) After removal, always place the boards on a grounded, static free surface, ESD pad or in a proper ESD bag. Do not slide the board over any surface.

Warranty

Contact Black Box for Warranty information.

LED Indicators

The Compact Media Converter features four diagnostic LEDs. The diagram below shows the location of the LEDs.

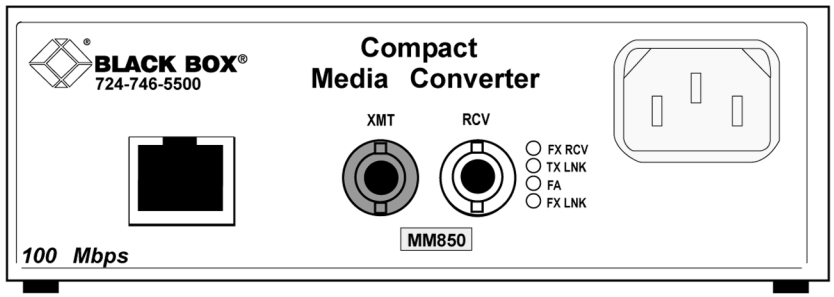

The LED functions are:

FX RCV Glows yellow when the Converter is receiving data.

TX LNK Glows green when a twisted pair link is established.

FA Glows green when FiberAlert is enabled and blinks when a FiberAlert situation occurs (i.e. the loss of one strand of fiber).

NOTE
FiberAlert does not apply and does not function on single-strand fiber versions of the 100Mbps Compact Media Converter.

FX LNK Glows green when a fiber link is established.

Installing the 100 Mbps Compact Media Converter

While the 100 Mbps Compact Media Converter comes ready to install, all configuration changes should be made after installation. To install the Compact Media Converter, make sure the unit is placed on a suitably flat surface. Then, attach the cables between the Compact Media Converter and each device that will be interconnected. Finally, plug the unit into a reliable, filtered power source.

NOTE
Since single-strand fiber products use optics that transmit and receive on two different wavelengths, deploy single-strand fiber products in pairs, or connect two compatible Black Box single-strand fiber products.

INSTALLATION TROUBLESHOOTING

To test the 100 Mbps Compact Media Converter during installation, first test the fiber and twisted pair connections with all troubleshooting features disabled, then enable these features, if desired, just before final installation. This will reduce the features' interference with testing.

When working with units whose features cannot be disabled, both twisted pair and fiber cables must be connected before the link LEDs will light.

To test a media converter by itself, first verify that an appropriate fiber patch cable is being used. Then, follow these steps:

Step 1: Connect the media converter to the twisted pair device with a twisted pair cable.

Step 2: Loop a single strand of fiber from the transmit port to the receive port of your media converter.

Step 3: Verify that both twisted pair and fiber link LEDs light on the Compact Media Converter.

Use the appropriate twisted pair cable, and have the crossover/pass-through switch set correctly.

If using a high powered device designed for long distance installations in a short distance installation, an optical attenuator may be needed to prevent data loss on a connection.

Contact Black Box for more information.

Black Box Customer Service

Order toll-free in the U.S.: Call 877-877-BBOX
(outside U.S. call 724-746-5500)
FREE technical support, 24 hours a day, 7 days a week

Call: 724-746-5500 or **Fax:** 724-746-0746

Mail order: Black Box Corporation
1000 Park Drive, Lawrence, PA 15055-1018

Web site: www.blackbox.com

E-mail: info@blackbox.com

Fiber Optic Cleaning Guidelines

Fiber optic equipment is extremely susceptible to contamination by particles of dirt or dust which can obstruct the optics and cause performance degradation. Good system performance requires clean optics and connector ferrules.

1) Only use fiber patch cords (or connectors) from a reputable supplier; low-quality components can cause many hard-to-diagnose problems.
2) Black Box installs dust caps to ensure factory-clean optical devices. These protective caps should not be removed until the moment of connecting the fiber cable to the device. Assure that the fiber is properly terminated, polished and free of any dust or dirt and that the location is as free from dust and dirt as possible.
3) Store spare caps in a dust-free environment such as a sealed plastic bag or box so reinstalled caps do not introduce any contamination to the optics.

WARNING
Integrated circuits and fiber optic components are extremely susceptible to electrostatic discharge damage. Only qualified service technicians using tools and techniques comforming to accepted industry practices should handle these components.

4) Reinstall the protective caps when disconnecting the fiber device.
5) To clean contaminated optics, alternate between blasting with clean, dry, compressed air and flushing with methanol to remove particles of dirt.

What Is Pulsing FiberAlert?

Pulsing FiberAlert provides the same function as FiberAlert but, rather than ceasing transmission when the receiving unit goes down, Pulsing FiberAlert sends pulses through the line so that once the receiving unit starts to function, transmission commences. Use Pulsing FiberAlert in the following two situations:

A) When connecting two Compact Media Converter units (or connecting a PSE-Compact Media Converter to a 100 Mbps Module TX/FX) with FiberAlert enabled.

B) When connecting one Compact Media Converter with FiberAlert enabled and one 10/100 Autosensing unit with Link Fault Detection (LFD) enabled.

Converter 1	Converter 2
FiberAlert Enabled	FiberAlert and Pulsing FiberAlert Enabled
FiberAlert Enabled	FiberAlert Disabled

INSTALLATION TIP
Enable FiberAlert and/or Pulsing FiberAlert on only ONE side of a media conversion; enabling it on both sides will keep both transmitters off indefinitely.

Specifications

Environmental

Operating Temperature: 32° - 122° F (0° - 50° C)

Storage Temperature: 0° - 160° F (-20° - 70° C)

Humidity: 5 - 95% (non-condensing)

Power

AC Input Load: 100-240VAC ±10%, 50/60 Hz, 1.5A

Heat generated: 51 BTU/hr.

Dimensions

1.64”H x 4.75”W x 4.95”D (4.17 cm x 12.07 cm x 12.57 cm)

Configuring the 100 Mbps Compact Media Converter

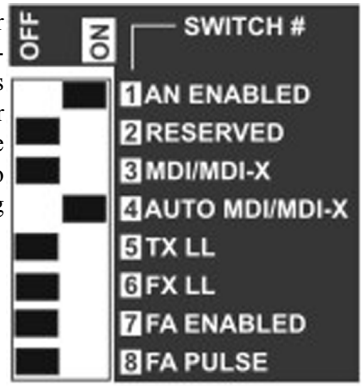

The 100 Mbps Compact Media Converter features an 8-position DIP switch for configuring the unit after installation. This switch is accessed through a cut-out in the bottom. After configuring the DIP switch, power cycle the Compact Media Converter for the changes to take effect. Default settings for the following features are shown in the diagram.

- AN ENABLED (Auto-Negotiation)
- MDI/MDI-X (Manual port setting)
- AUTO MDI/MDI-X (AutoCross)
- TX LL (TX LinkLoss)
- FX LL (FX LinkLoss)
- FA ENABLED (FiberAlert)
- FA PULSE (Pulsing FiberAlert)

Some switches are reserved for future development.

Twisted Pair Crossover/Pass-Through Connections

Whether using crossover or straight-through CAT5 twisted pair cabling, the 100 Mbps Compact Media Converter will support both types of connections by one of the following methods:

AutoCross (Switch 4): The Compact Media Converter includes AutoCross, a feature which automatically selects between a crossover workstation or pass-through/ repeater hub connection depending on the connected device. To enable AutoCross, move the Auto MDI/MDI-X switch to the ON position.

MDI/MDI-X (Switch 3): To manually configure the Compact Media Converter for a pass-through (**MDI**) or a crossover (**MDI-X**) connection, set Switch 4 to **OFF** and set Switch 3 to the desired connection type: MDI=OFF and MDI-X=ON. If unsure about the type of connection, set the DIP switch to a position that makes the twisted pair LNK (link) LED glow.

Auto-Negotiation

Auto-Negotiation, enabled by default, allows the Compact Media Converter to communicate at the speed and duplex settings of the device to which it is connected. Therefore, if the device connected to the Compact Media Converter sends and receives at 100Mbps, Full-Duplex, so will the Compact Media Converter. This will function within the operating parameters of the Compact Media Converter (10/100Mbps, Half or Full Duplex).

To make the Compact Media Converter only communicate at one speed or one duplex setting, Auto-Negotiation will need to be turned off.

About FiberAlert and LinkLoss

The Compact Media Converter comes with the following troubleshooting features:

- FX LinkLoss (LinkLoss over a Fiber cable)
- TX LinkLoss (LinkLoss over a Twisted Pair cable)
- FiberAlert (including Pulsing FiberAlert)

LinkLoss and FiberAlert are advanced troubleshooting features that can help locate "silent failures" on a network. Users should understand how FiberAlert and LinkLoss work, and how they will act in a network environment, before attempting to install the Compact Media Converter.

NOTE
Without understanding LinkLoss and FiberAlert, the 100 Mbps Compact Media Converter could appear flawed or even malfunctioning.

About Link Integrity

During normal operation, link integrity pulses are transmitted by all point-to-point Ethernet devices. When a Compact Media Converter receives valid link pulses, it knows that the device to which it is connected is functioning, and that the copper or fiber cable coming from that device is intact. The appropriate “LINK” LED is lit to indicate this. The Compact Media Converter also sends out link pulses from its copper and fiber transmitters, but normally has no way of knowing whether the cable to the other device is intact and the link pulses are reaching the other end. FiberAlert and LinkLoss allow this information to be obtained from the fiber, even when physical access to a remote device (and its link integrity LED) is not available.

What Is FX LinkLoss?

FX LinkLoss is a troubleshooting feature that allows users to detect failures over the fiber connection. When a fault occurs on the fiber segment of a conversion, FX LinkLoss detects the fault and passes this information to the twisted pair segment. If a Compact Media Converter is not receiving a fiber link, FX LinkLoss disables the transmitter on the Compact Media Converter 's twisted pair port. This results in a loss of link on the device connected to the twisted pair port.

What Is TX LinkLoss?

TX LinkLoss is a troubleshooting feature that allows users to detect failures over the twisted-pair connection. When a fault occurs on the twisted pair segment of a conversion, TX LinkLoss detects the fault and passes this information to the fiber segment. If a Compact Media Converter is not receiving a twisted pair link, TX LinkLoss disables the transmitter on the media converter's fiber port. This results in a loss of link on the device connected to the fiber port.

What is FiberAlert?

FiberAlert is a troubleshooting feature that minimizes the problems associated with the loss of one strand of fiber. If a strand is unavailable, the Compact Media Converter notes the lost link and will stop transmitting data and the link signal until a signal or link pulse is received. The result is that the link LED on BOTH sides of the fiber connection will go out indicating a fault somewhere in the fiber loop. Using FiberAlert, a local site administrator is notified of a fault and can quickly determine the location of a cable fault.

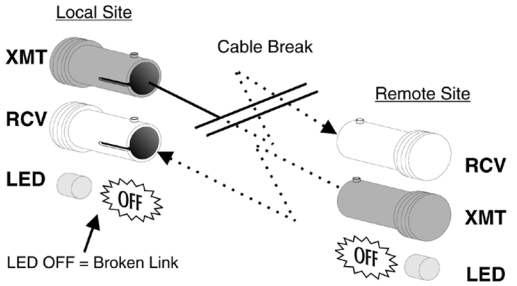

Using FiberAlert and LinkLoss

The following table provides an overview of the troubleshooting features, their functionality and the recommended settings for a pair of media converters in a typical central/main site to remote site application:

Feature	Fault Location	Disabled LEDs	Enable At
FX LinkLoss	Fiber	Twisted Pair	Main Site Only
TX LinkLoss	Twisted Pair	Fiber	Remote Site Only
FiberAlert	Fiber	Fiber	Remote Site Only

NOTE
FiberAlert is not available/applicable on single-strand fiber versions of Compact Media Converter.